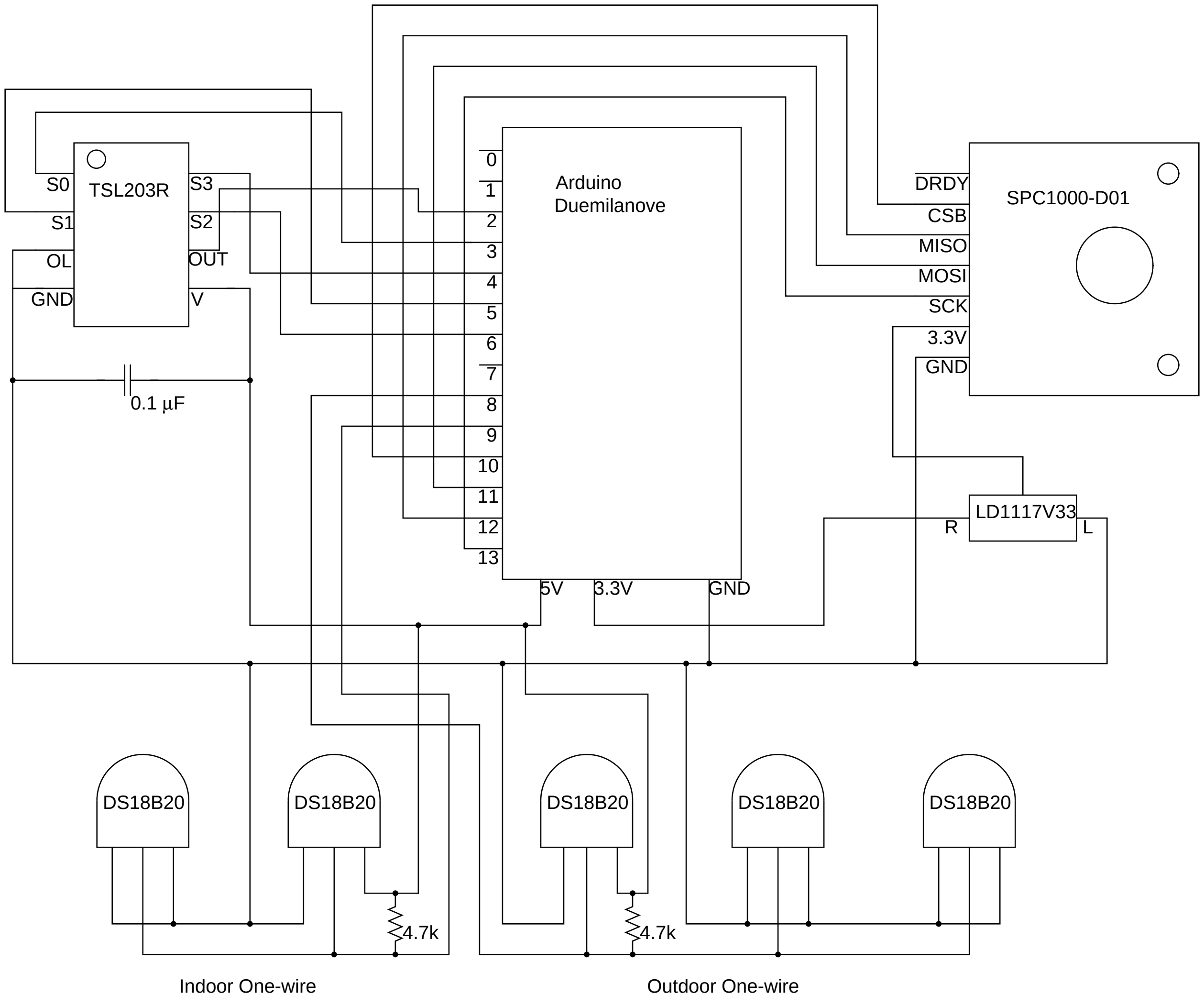
TSL203R
S0
S1
OL
GND
S3
S2
OUT
V
0.1 µF
Arduino
Duemilanove
0
1
2
3
4
5
6
7
8
9
10
11
12
13
5V
3.3V
GND
SPC1000-D01
DRDY
CSB
MISO
MOSI
SCK
3.3V
GND
LD1117V33
R
L
DS18B20
DS18B20
DS18B20
DS18B20
DS18B20
4.7k
4.7k
Indoor One-wire
Outdoor One-wire